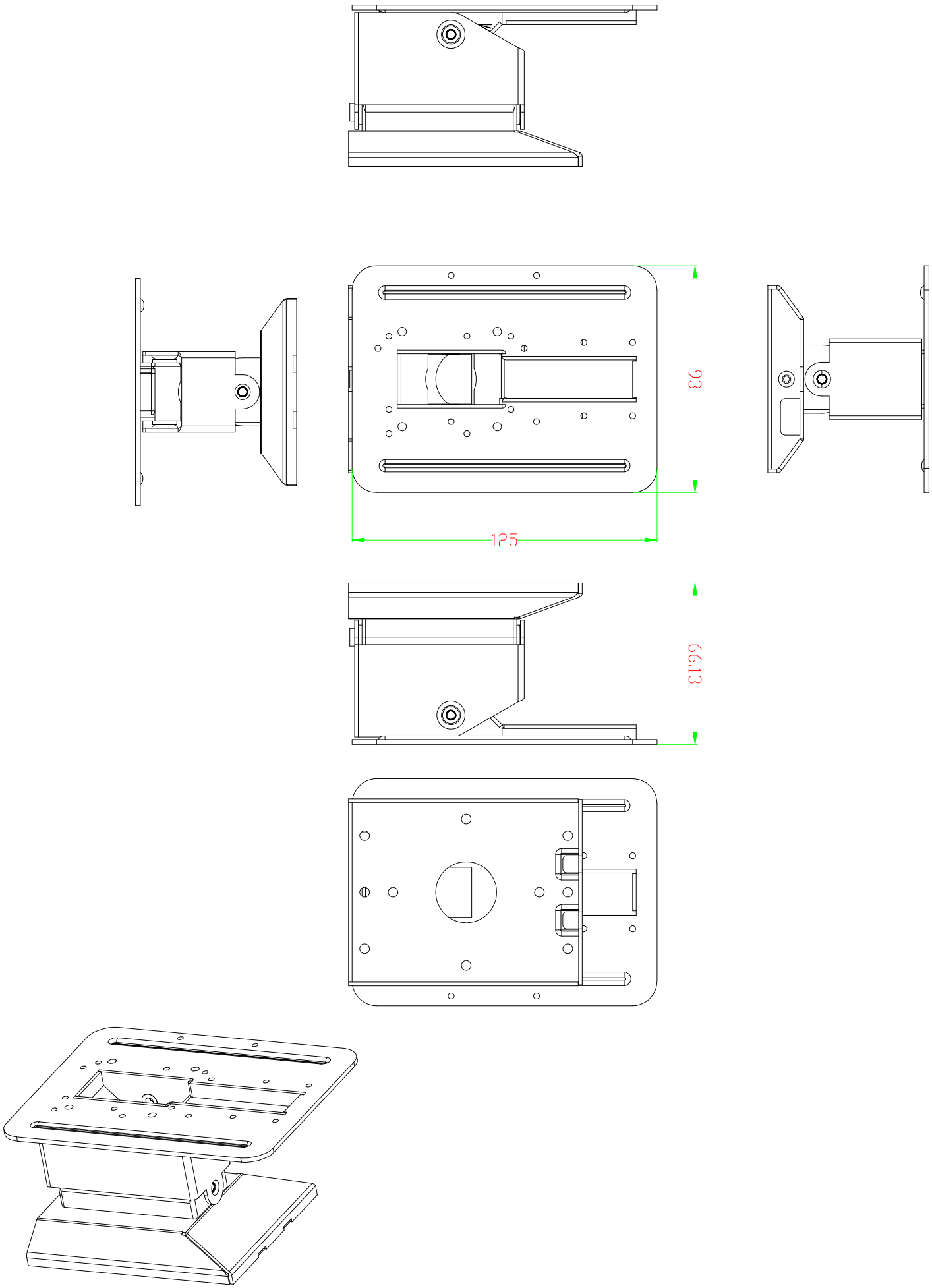
93
125
66.13